Arc Flash Exercise 6 - Solutions

Purpose & Description

The purpose of this exercise is to perform an arc flash calculation for a medium voltage system protected with differential protection. This exercise is an example of differential protection application for a real-life power system.

Setup

Load the project file named “Arc Flash Example6”. The solution to this example is located in a directory called “Solution6”. Open the solution project only to compare against your exercise once completed.

Prior to running the exercise, please make sure that the following settings are applied in the Options (Preferences) editor:

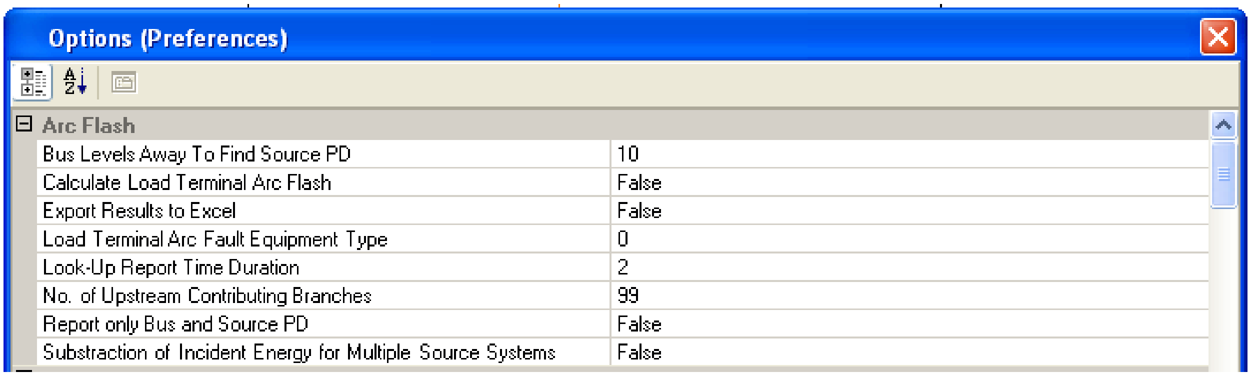

Options (Preferences)

Arc Flash

Bus Levels Away To Find Source PD	10
Calculate Load Terminal Arc Flash	False
Export Results to Excel	False
Load Terminal Arc Fault Equipment Type	0
Look-Up Report Time Duration	2
No. of Upstream Contributing Branches	99
Report only Bus and Source PD	False
Substraction of Incident Energy for Multiple Source Systems	False

Procedure

Step1

Select study case AF-Decay and fault the following buses: Bus A, Bus B, Bus C, Ter TX1. Run AF calculation and name the report AF-Decay. Record the incident energy results in the following table:

Faulted Bus	Incident Energy (cal/cm^2)	Source Protective Device
Bus A	150.10	576
Bus B	150.68	586
Bus C	151.01	596
Ter TX1	35.33	476

Step2

Setup differential protection on Buses “BusA”, “Bus B” and “Bus C”. Please use the images below to setup the current transformers (CTs) and the differential relay assignments:

Bus A:

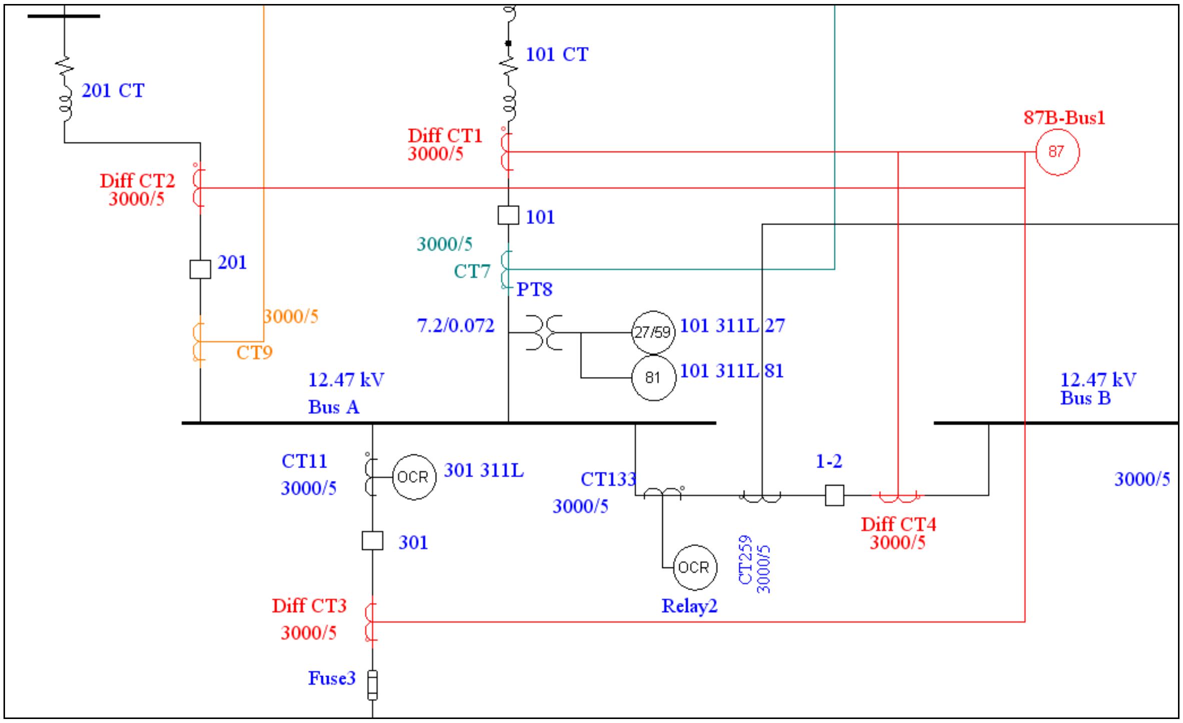
201 CT
101 CT
87B-Bus1
87
Diff CT1
3000/5
Diff CT2
3000/5
101
201
3000/5
CT7
PT8
3000/5
CT9
7.2/0.072
27/59
101 311L 27
81
101 311L 81
12.47 kV
Bus A
12.47 kV
Bus B
CT11
3000/5
OCR
301 311L
CT133
3000/5
1-2
3000/5
301
Diff CT4
3000/5
CT259
3000/5
OCR
Relay2
Diff CT3
3000/5
Fuse3

Use current transformers: Diff CT1, Diff CT2, Diff CT3, Diff CT4 with ratio 3000/5. Interlock Relay 87B-Bus1 to CBs 101, 201, 1-2 & 301. The relay delay time should be 10 milliseconds.

Bus B:

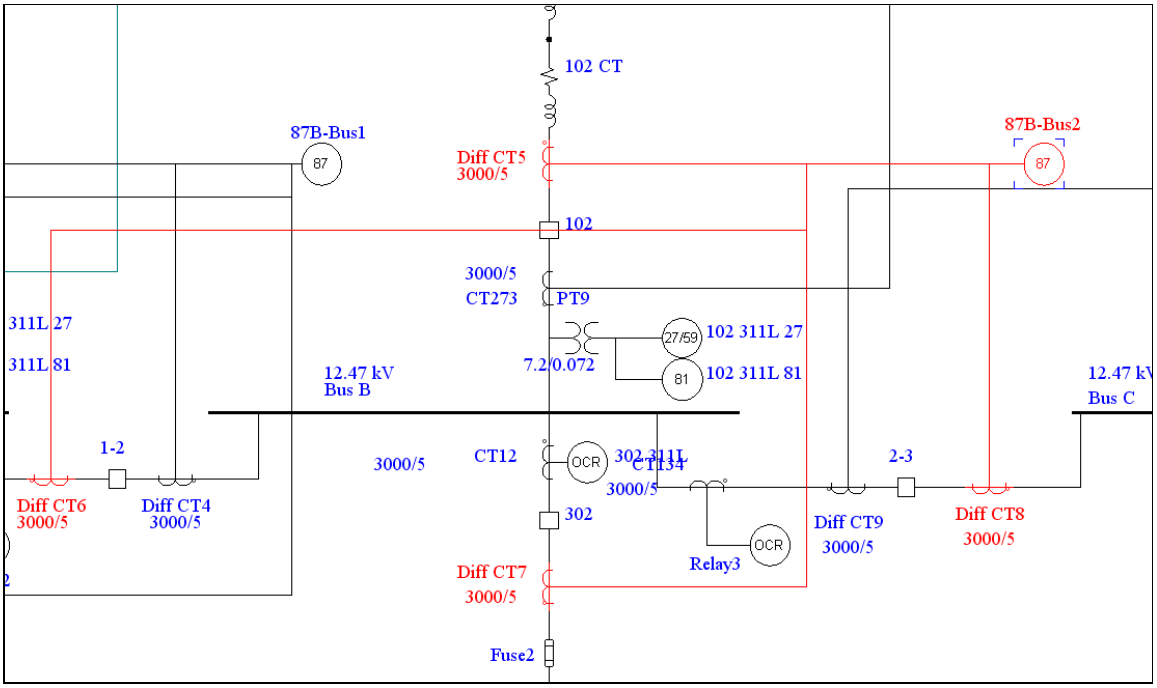
102 CT
87B-Bus1
87
Diff CT5
3000/5
87B-Bus2
87
102
3000/5
CT273
PT9
311L 27
311L 81
27/59
102 311L 27
7.2/0.072
81
102 311L 81
12.47 kV
Bus B
12.47 k
Bus C
1-2
3000/5
CT12
OCR
302 311L
CT134
3000/5
2-3
Diff CT6
3000/5
Diff CT4
3000/5
302
OCR
Relay3
Diff CT9
3000/5
Diff CT8
3000/5
Diff CT7
3000/5
Fuse2

Use current transformers: Diff CT5, Diff CT6, Diff CT7, Diff CT8 with ratio 3000/5. Interlock relay 87B-Bus2 to CBs 102, 302, 1-2 & 2-3. The relay delay time should be 10 milliseconds.

Bus C:

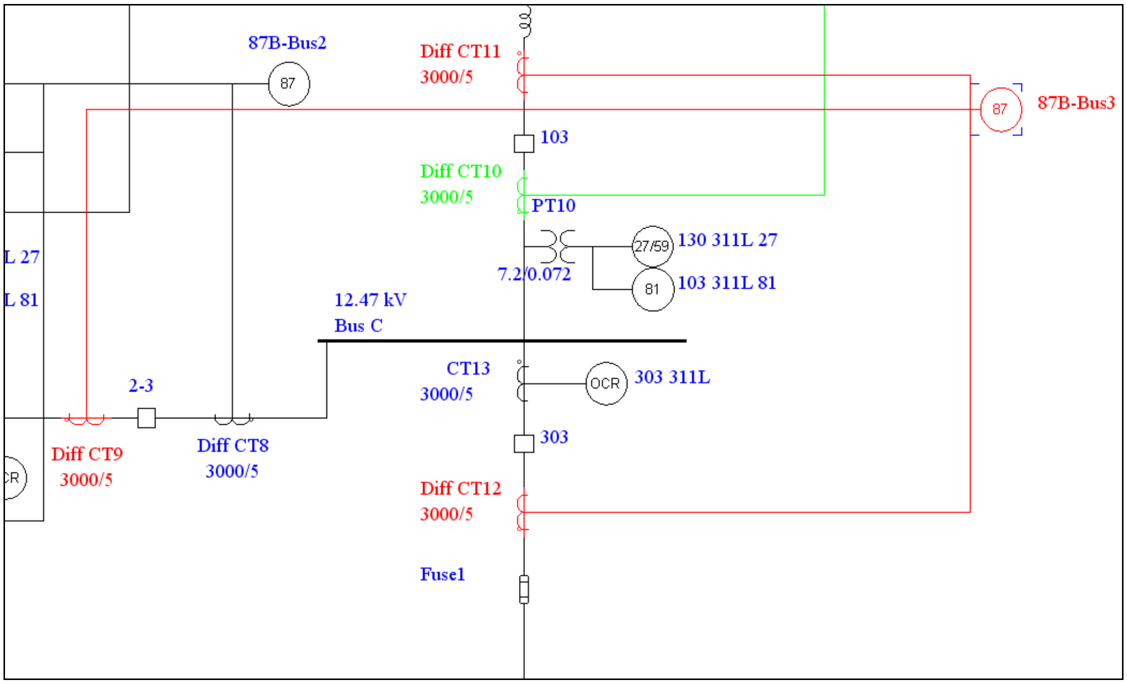

87B-Bus2
87
Diff CT11
3000/5
87
87B-Bus3
103
Diff CT10
3000/5
PT10
27/59
130 311L 27
7.2/0.072
81
103 311L 81
L 27
L 81
12.47 kV
Bus C
2-3
CT13
3000/5
OCR
303 311L
303
Diff CT9
3000/5
Diff CT8
3000/5
Diff CT12
3000/5
Fuse1

Use current transformers: Diff CT11, Diff CT9, Diff CT12 with ratio 3000/5. Interlock Relay 87B-Bus3 to CBs 103, 303 & 2-3. The relay delay time is 10 milliseconds.

Step3
Now setup the protection for 3WTRA.

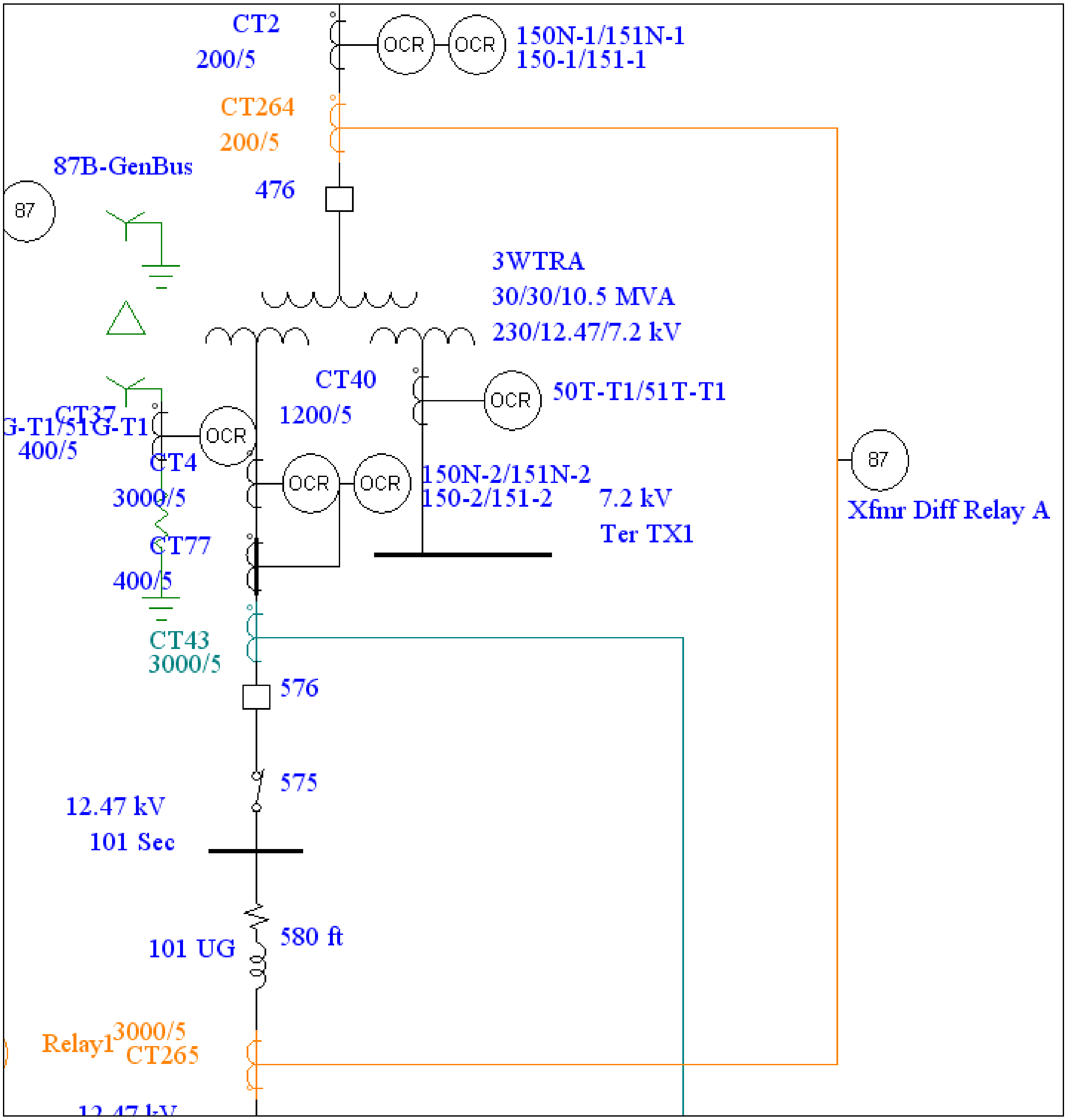
CT2
200/5
OCR
OCR
150N-1/151N-1
150-1/151-1
CT264
200/5
87B-GenBus
87
476
3WTRA
30/30/10.5 MVA
230/12.47/7.2 kV
CT40
1200/5
OCR
50T-T1/51T-T1
G-T1/51G-T1
CT37
400/5
OCR
CT4
3000/5
OCR
OCR
150N-2/151N-2
150-2/151-2
7.2 kV
Ter TX1
87
Xfmr Diff Relay A
CT77
400/5
CT43
3000/5
576
575
12.47 kV
101 Sec
101 UG
580 ft
Relay1
3000/5
CT265

Use current transformers CT264 & CT265. Interlock Xfmr Diff Relay A to CB 476 & 576. The operating time of this relay is 10 milliseconds.

Step4

Select study case AF-Decay. Run AF for the same buses as in Step1. Name the report “AF-Decay-WithDiff”. Record the incident energy values in the table below.

Arc Flash Exercise 6 - Solutions

Faulted Bus	Incident Energy Step 1 (cal/cm^2)	Incident Energy Step 4 (cal/cm^2)	% Incident Energy Reduction
Bus A	150.10	5.70	96.20
Bus B	150.68	5.70	96.22
Bus C	151.01	5.70	96.23
Ter TX1	35.33	5.70	83.87

Step5

Answer the following questions.

5.1 Why is the energy for a fault at the source protective device HVCB “101” higher than that of Bus A?

Because HVCB “101” is protected by differential “Relay16”, which has a longer delay time (20 ms).

5.2 What is the protective device for a fault at HVCB “101”? What is the fault clearing time?

HVCB “576” is tripped by “Relay 16” with a total operating time of 4.2 cycles.

5.3 What would be the incident energy for a fault at HVCB “101” if “Relay16” were disabled (out of service)? What would be the clearing time and source PD?

The energy at HVCB “101” would be 150.1 cal/cm^2 if “Relay 16” was disabled. The FCT = 116.4 cycles.

5.4 How can you simulate a fault on HVCB “221”? (Assume that the generator has special protection and that it will contribute to the fault for 2 seconds). Please consider that ETAP does not model Generator differential protection in version 7.0.0.

Use the Fixed FCT feature from the Bus Arc Flash page. Utilize the decay from the generator decrement curve.
